■CONTENTS ■CONTENU

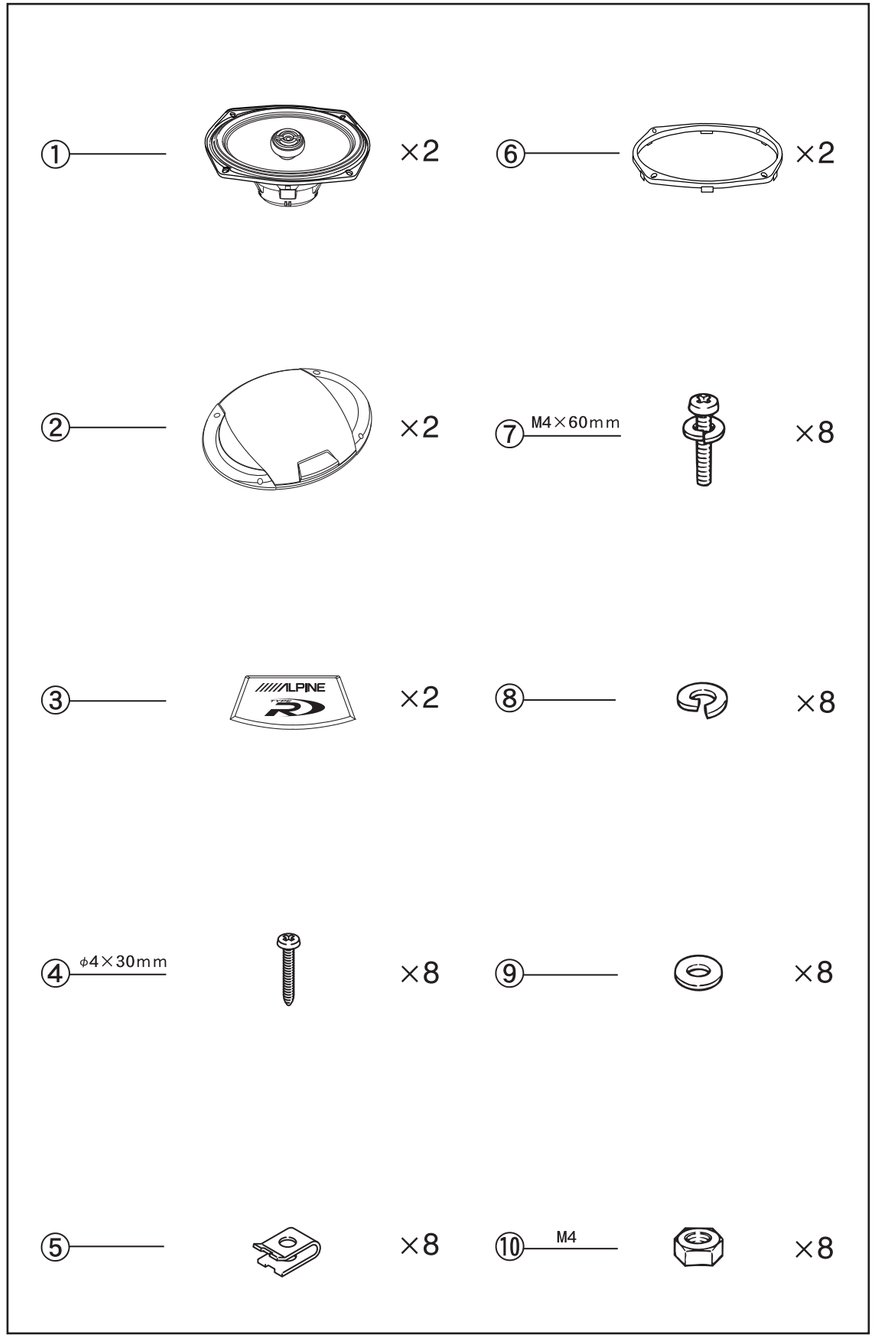

■INSTALLATION ■INSTALLATION

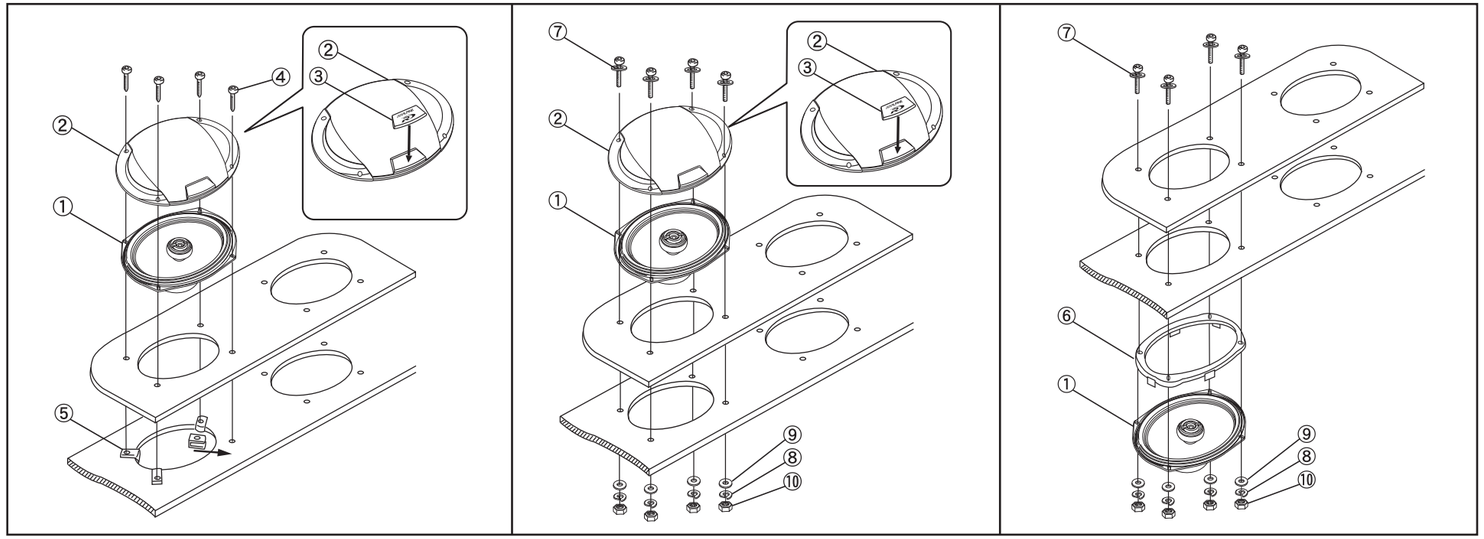

■EXTERNAL DIMENSIONS ■DIMENSIONS EXTERNES

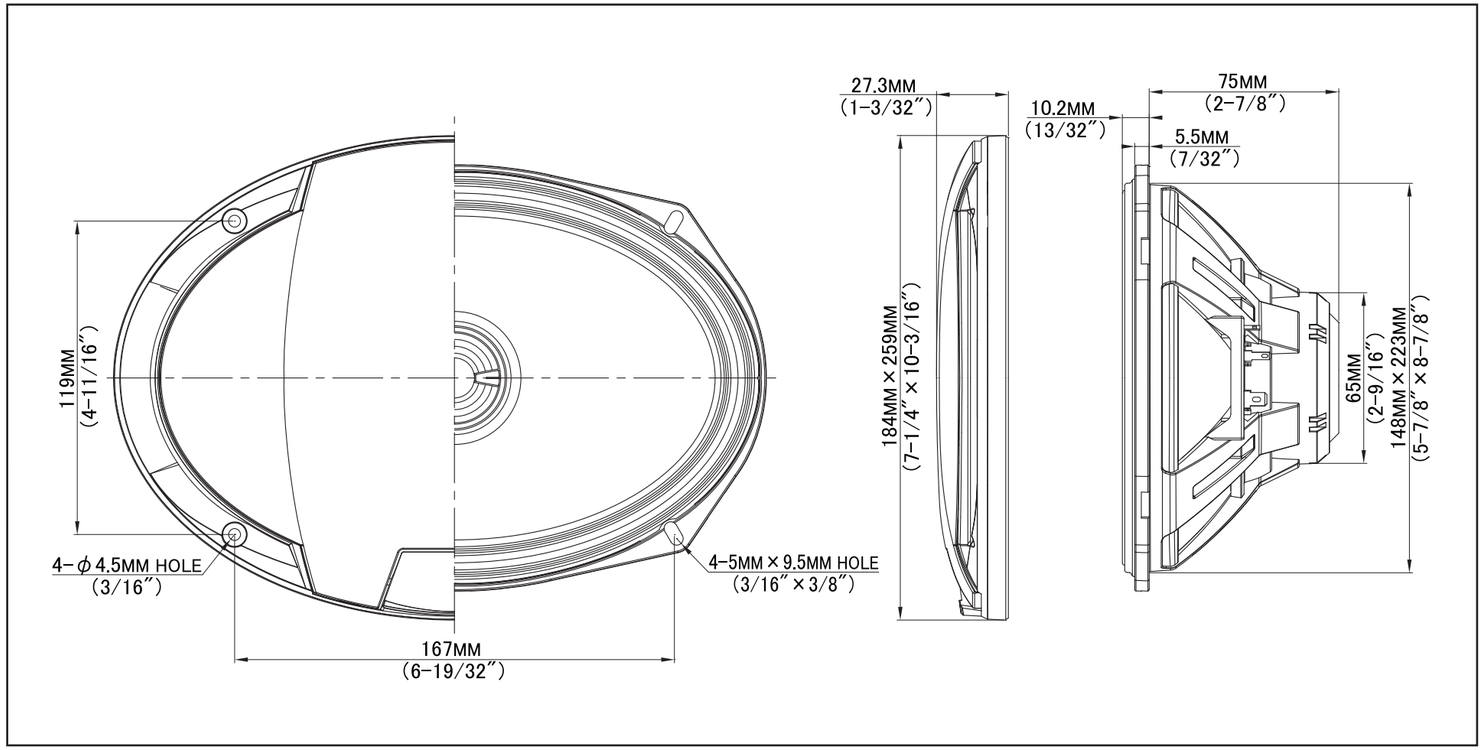

SPR-69

MADE IN CHINA **FABRIQUE EN CHINE**

DESIGNED IN USA CONÇU AUX ETATS-UNIS

1 PAIR